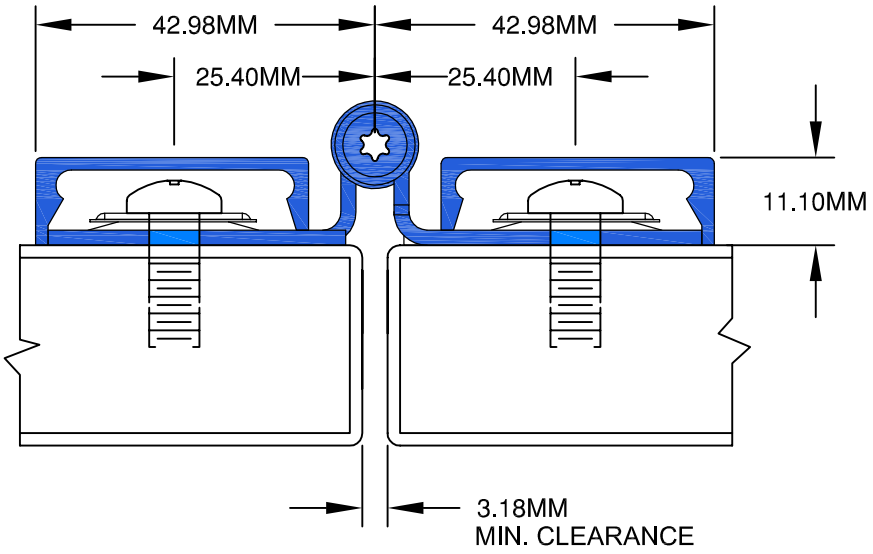

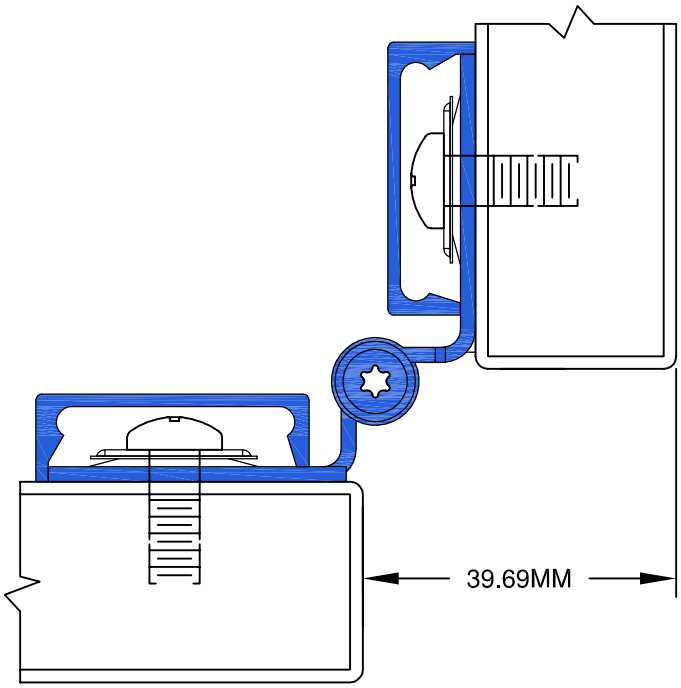

SELECT HINGES™
SELECT Products Limited

9770 Shaver Road Portage, MI 49024
Ph: 800-423-1174 Fax: 800-423-7107
www.select-hinges.com

SL902 TOILET PARTITION HINGE